W O M E R & A S S O C I A T E S

architecture ● engineering ● structural ● fire protection ● planning
A CERTIFIED MINORITY DESIGN FIRM

Old City Hall Building · 221 North Wall Street Suite 600 · Spokane WA 99201
**T**: (509) 534-4884 **F**: (509) 534-4943 Toll-Free: (888) 966-3778
Web Site: www.wwomer.com

**SPOKANE SCHOOL DISTRICT 81**
**MADISON ELEMENTARY SCHOOL KITCHEN REMODEL**
**319 WEST NEBRASKA AVENUE**
**SPOKANE, WASHINGTON**
**BID NO. 13-1516**

# ADDENDUM NO. 1
**March 7, 2016**

This addendum is hereby incorporated into the bidding documents for the General, Structural, Mechanical and Electrical construction of the above referenced project.

The corrections, clarifications, changes and approvals herein shall become an integral and binding part of any contract entered into between the Owner, Contractor and successful sub-bidders.

## SPECIFICATIONS

1. **Change:** Instructions to Bidders, page 12, paragraph 1.7.C. Sub-Contractor Bonding. Sub-Contractor is NOT required to be Bonded for this project.
2. **Clarification:** AIA Document A201-2007, General Conditions of the Contract for Construction, page 72, paragraph A, Permits, Fees and Notices, item 1, City, County and Other Jurisdictional Authorities. Paragraph to read: The Contractor will obtain and pay the initial construction and inspection permit …
3. **Change:** Electrical Specifications Section 26 0533, Raceway and Boxes for Electrical Systems. Page 3, paragraph 3.1.C, change minimum raceway conduit size to ¾ inch.
4. **Change:** Electrical Specification Section 26 0923, Lighting Control Devices. Page 3, paragraph3.3.A, change minimum conduit size to ¾ inch.
5. **Change:** Electrical Specification Section 26 7270, Electrical Requirements for Integrated Security Systems. Page 1, paragraph 2.02, Cable, Change cable type to match table attached to this addendum.
6. **Add:** Electrical Specification Section 27 5123, Intercom System. Page 3, paragraph 3.02.I, add Camtek of Spokane as a District approved contractor. Similar to Specification Section 27 1500, paragraph 1.02, Compliance.
7. **Add:** Add new Electrical Specifications Section 27 7200, Fire Alarm System. 32 pages.

## DRAWINGS

ARCHITECTURAL

1. **Add:** Sheet A2.01, Floor Plan. Window “A” is alternate #1, Blinds to be added with alternate #1.
2. **Change:** Sheet A2.02, Kitchen Plan. At item 13, Soiled Dish Table, change 22 inch x 22 inch sink to an 18 inch diameter cone type sink, compatible with the existing Salvajor food waste disposer.
3. **Add:** Sheet A2.02, Kitchen Plan. At item 27 and 30, Existing Condensing Units. Condensing units for both the walk-in cooler and freezer, the curbs may be removed and reused at Madison School.
4. **Change:** Sheet A2.02. Kitchen Plan. Walk-in Cooler, Item 29. The length will be increased 2 inches to 12’-0”, from 11’-10”. This allows the existing cooler roof panels to be reused, but a new panel is required be due to the width. The current cooler and freezer roof panels have holes in them due to fire sprinkler requirements. When the panels are reinstalled at Madison School, those holes need to be refill with spray in foam insulation.

5. **Option:** Sheet A2.02, Kitchen Plan. Walk-in Cooler, Item 29. As a contractor pricing option, new wall and ceiling panels may be priced, in place of partial panel replacement. The cooler door can be reused.
6. **Clarification:** Sheet A3.01, Roof Plan. For Unit Pricing for reflashing of existing roof penetrations, the existing roof is TPO.
7. **Change:** Sheet A4.01, Elevations and Building Sections. At wall section 4, change floor slab from a recessed to a flush slab. The walk-in freezer unit will not be recessed.

STRUCTURAL

1. **Change**: Sheet S2.01, Structural Foundation Plan. The depressed concrete floor is not required. The concrete slab at north end of the new addition shall be flush with the remainder of the slab.

PLUMBING

1. **Revise**: Sheet 1.00, Plumbing Plan. Refer to attached plumbing plan for clouded revised waste lines.

ELECTRICAL

1. **Revise:** Sheet E2.01, Electrical Floor Plan. Keyed Notes, item 3, last sentence to read "Coordinate with Owner and Camtek and provide all required accessories."
2. **ADD:** Sheet E2.01, Electrical Floor Plan. General Notes, add new item 5: "Tie suppression system and new fire alarm devices into existing fire alarm and detection system. Provide all cables, raceways. Power moduals, relays, etc. as required."
3. **Clarification:** Sheet E2.01, Electrical Floor Plan. Fixture "A", shall be dimmable and controlled with 3-way dimmer switches.
4. **Revise:** Sheet E2.01, Electrical Floor Plan. Keyed Notes, item 4, last sentence to read "Coordinate with Owner and Camtek."
5. **Change:** Sheet E2.01, Electrical Floor Plan. Change electrical Panel from Panel "L" to Panel "K1."
6. **Change:** Sheet E3.00, Schedules. At Panel Schedule "K", change 3 pole circuit breaker 7, 9, 11 and single pole breaker 14, shall be shunt trip type interlock with suppression system to de-energize equipment in the event of fire.
7. **Change:** Sheet E3.00, Schedules. At Panel Schedule "K" and "K1", change location to room 137.

## APPROVED MANUFACTURER'S SUBSTITUTIONS

ARCHITECTURAL
Section 11 4000, page 3, item 13. New soiled dish table with sink. Krueger Sheet Metal.

MECHANICAL & PLUMBING
1. Section 23 3423, page 2, paragraph 2.1.2.3, Power Ventilators. Twin City Fan.

ELECTRICAL
1. Sheet E2.01, Legend. Light Fixture approvals.
   a. Kenall. FES8 4 67L40K DCC 1 DV PP.
   b. Kenall. SH8 4 67L40K DCC 1 DV 9500.

## ATTACHMENTS

Mandatory Pre-Bid Sign-In Sheet.
Electrical Specification Section 27 7200, Fire Alarm Systems.
Cabling Requirement Table.
Drawing Sheet P1.00, Revised Plumbing Plan.

**END OF ADDENDUM No. 1**

MADISON ELEMENTARY SCHOOL KITCHEN REMODEL

MANDATORY PRE-BID MEETING

**MANDATORY PRE - BID MEETING**
**SIGN IN SHEET**

**Project:**
Spokane School District 81
Madison Elementary School Kitchen Remodel
Spokane, WA
Bid No. 13-1516

Womer & Associates
Old City Hall Bldg.
221 N. Wall St. Suite 600
Spokane, WA 99201

**Date: March 3, 2016**
**Time: 1:00 PM**
**Location: District Capital Projects and Planning Dept.**

WOMER & ASSOCIATES
ARCHITECTS • ENGINEERS

| Name | Company Name | Address | Phone # | Fax # | email |
|---|---|---|---|---|---|
| Carsie T. Kka | Wilson Brothers Inc | 822 Morgan Davenport, WA 99122 | 509-725-0303 | | bids@wb.gc.com |
| Mark Uphus | ME Uphus Construction | 3929 E. Boone Spokane 99202 | 509-926-4998 | 509 926-1619 | meuphus@yahoo.com |
| Chuck Moore | BCI | Box 6649 | 509-468-4932 | 509-468-5009 | chuck@bieton construction.net |
| Roy Lamb | Lambco | P.O. Box 2903 99220 | 509-928-3396 | 509-534-0907 | |
| Clay Barney | vti Electric | 9922 E Montgomery Spokane Valley | 509-944-0840 | | cbarney@vtielectric.com |
| | | | | | |
| | | | | | |
| | | | | | |
| | | | | | |
| | | | | | |

MADISON ELEMENTARY SCHOOL KITCHEN REMODEL

MANDATORY PRE-BID MEETING

| Name | Company Name | Address | Phone # | Fax # | email |
|---|---|---|---|---|---|
| Maynard Dale | Western Star | P.O. Box 208 Valleyford, WA 99036 | 892-0600 | 926-0070 | wsc@air-pix.com |
| Bill Storke | Vaan Comp. | 3231 N Flag Ct Mwn. | 208-699-6125 | | bstorke@vaancompanies.com |
| Paul Hogan | Kruger S/M | 731 N Superior | 484-0221 | 489 6539 | Paul@KSmetal.net |
| Chris Whitt | Tactical Plumbing | PO Box 8326 Spokane | 509 990 6605 | | ckplumbing44@gmail.com |
| Tim Moeks | DAKDAK | 7815 Hwy 53 | 509 280 0555 | | tim@DAKDAKinc.com |
| Dee Scott | DR Scott Const | 4304 E 17th Ave | 991-6725 | 534-0551 | dee@drscottconstruction.com |
| | | | | | |
| | | | | | |
| | | | | | |
| | | | | | |
| | | | | | |
| | | | | | |
| | | | | | |
| | | | | | |
| | | | | | |

**PLAN HOLDER LIST**

**Project:**
Spokane School District 81
Madison Elementary School Kitchen Remodel
Spokane, WA
Bid No. 13-1516
Plan Deposit: $200.00 per set of Drawings & Specifications. Two sets maximum.

Womer & Associates
Old City Hall Bldg.
221 N. Wall St. Suite 600
Spokane, WA 99201

**Bid Date: March 10, 2016**
**Time: 2:00:00 PM**

WOMER & ASSOCIATES
ARCHITECTS • ENGINEERS

As of: 3.7.2016

| Name | Company Name | Address | Phone # | Fax # | Email |
|---|---|---|---|---|---|
| Chuck Moore | Burton Construction | 3119 E. Nebraska Ave. | 509.468.4932 | 509.468.5009 | chuck@burton construction.net |
| Dee Scott | DR Scott Construction | 4304 E. 17th Ave. | 509.991.6725 | 509.534.0551 | dee@drscott construction.com |
| | Wilson Brothers Inc. | 822 Morgan St. Davenport, WA. | 509.725.0303 | | bids@wbigc.com |
| | ME Uphus Construction | 3939 E. Boone Spokane, WA. | 509.536.4919 | 509.536.1619 | meuphus@yahoo.com |
| | Dardan | 7815 HWY 53 | 509.280.0555 | | tim@dardaninc.com |
| | Lambco | PO Box 2903 Spokane, WA. | 509.928.3396 | 509.534.0907 | |
| | VTI Electric | 9922 E. Montgomery Spokane Valley, WA. | 509.944.0840 | | cbarney@vtielectric. com |
| | Western States | PO Box 208 Valleyford, WA | 509.892.0600 | 509.926.0090 | wsc@air-pipe.com |
| | Vann Companies | 3231 N. Flag Ct. North New Hope, MN. | 208.699.6125 | | bstorlie@vancompanies. com |
| | Kruger Sheet Metal | 731 N. Superior Spokane, WA. | 509.489.0221 | 509.489.6539 | paul@ksmetal.net |
| | Tactical Plumbing | PO Box 8326 Spokane, WA. | 509.990.6605 | | ckplumbing44@ gmail.com |

| | | | | | |
|---|---|---|---|---|---|
| Name | Company Name | Address | Phone # | Fax # | Email |
| | | | | | |
| | | | | | |
| | | | | | |
| | | | | | |
| | | | | | |
| | | | | | |
| | | | | | |
| | | | | | |
| | | | | | |
| | | | | | |
| | | | | | |
| | | | | | |
| | | | | | |
| | | | | | |
| | | | | | |

**PART 1 - GENERAL**

1.01 SCOPE OF WORK

A. Provide additional fire alarm components and appurtenances to existing Silent Knight IFP-1000 fire alarm system to provide detection, testing and control as shown on the drawings.

B. Contractor shall have his fire alarm system supplier provide shop drawings including battery calculations, notification appliance circuit voltage drop calculations, wire size, etc. as required for review by the authority having jurisdiction (AHJ) as required per code.

C. The entire system shall fully comply with all fire codes currently enforced at the project location. If any conflict occurs between the codes and these contract documents, the code shall govern. This does not relieve the contractor of complying with any requirements of the plans and specifications which are in excess of the codes.

D. Program the fire alarm system in accordance with requirements of the Authority Having Jurisdiction (AHJ) and directions received from the Owner's Representative.

E. Adjust and test the fire alarm system, demonstrate the system to the authority having jurisdiction (in the presence of the Owner), and instruct the Owner's staff in operation and recommended maintenance procedures.

F. System shall be configured for central monitoring by the existing U.L. listed Central Station (Stanley Security Solutions). Provide connection to the existing U.L. listed Bosch security panel.

1.02 RELATED REQUIREMENTS

A. Drawings and general provisions of the Contract, including General and Supplementary Conditions and Division 1 specifications, apply to work specified in this section.

1. Section 16010: General Requirements
2. Section 16110: Raceway Systems
3. Section 16120: Wire and Cable
4. Section 16131: Pull & Junction Boxes
5. Section 16134: Outlet Boxes
6. Section 16145: Surface Raceway Assemblies
7. Section 16147: Device Plates
8. Section 16199: Identification

1.03 GENERAL DESCRIPTION

A. System shall consist of control cabinets with system modules, relays, battery backup, annunciators and control switches, appliance extender panels, remote annunciators, remote control panels, manual stations, heat detectors, smoke detectors, duct smoke detectors, audible and visual alarm signals, exterior bell control relays, central station communicator and all other miscellaneous equipment required for a complete operable system which complies with all applicable codes and standards.

B. The system components and system installation shall comply with the latest editions (as adopted by the City of Spokane) of NFPA 72 and the International Fire Code.

1.04 QUALIFICATIONS OF SYSTEM VENDER

A. The System Vendor shall be a factory branch office or an authorized dealer/distributor for the fire alarm system equipment manufacturer, with the capability of offering factory-certified service at the Project site, both during and after the warranty period.

B. The System Vendor shall employ factory-trained technicians skilled in maintenance of fire alarm systems, and shall maintain a service organization with spare parts in stock within 50 miles of the Project site. The technicians shall be licensed as required by the local jurisdiction to perform work on fire alarm systems and be at least NICET Level 2 Certified. The service organization shall have a minimum of 5 years experience in servicing fire alarm systems, and shall be capable of responding to service calls within 24 hours.

C. Approved System Venders

1. Allied Fire & Security
2. Camtek
3. Moon Security

1.05 QUALIFICATIONS OF SYSTEM INSTALLER

A. The System Installer shall be an organization specializing in installation of low-voltage systems and having a minimum of 3 years experience in installing fire alarm systems similar in scope and complexity to the system required for this project. The organization shall employ trained technicians skilled in installation of fire alarm systems. The technicians shall be licensed as required by the local jurisdiction to perform work on fire alarm systems, NICET Level 2 Certified, and shall have successfully installed other fire alarm systems of the same type, size, complexity and manufacturer as that provided for this Project.

B. Approved System Installers

1. Allied Fire & Security

2. Camtek
3. Moon Security

1.06 SYSTEM OPERATION

A. Each initiating and signal circuit shall be electrically supervised for opens, shorts, and ground faults in the wiring. The occurrence of any fault shall activate the system trouble circuitry but shall not interfere with the proper operation of any circuit that does not have a fault condition. Initiating circuits shall be wired using Class "B" supervised circuits. Signal circuits shall be Style "Y" supervised circuits.

B. The alpha-numeric display at the control panel, remote control panels and remote annunciators shall indicate the following information relative to the abnormal condition of any point within the system:

1. Minimum 32-character custom label (device location and address)
2. Type of device (heat, smoke, manual, waterflow)
3. Point status (alarm, supervisory, trouble)

C. The activation of a heat detector, ceiling-mounted smoke detector, sprinkler flow switch, or any other alarm initiating device shall cause the following operations:

1. Display an alpha-numeric device description on the control cabinet door
2. Display an alpha-numeric device description on all remote control panels
3. Display an alpha-numeric device description on all remote annunciators
4. Activate all audible and visual alarm signals
5. Release all magnetically-held and electrically-held hinged doors
6. Release all exit doors controlled by electric locks for access control
7. Cause all electrically-operated security closures occurring in the path of egress to open
8. Provide a dry contact closure for the Energy Management System
9. Report alarm condition to an approved Central Reporting Agency

D. The activation of a manual station shall cause the following operations:

1. Display an alpha-numeric device description and activate sounding device on the control cabinet door
2. Display an alpha-numeric device description and activate sounding device on all remote control panels
3. Display an alpha-numeric device description on all remote annunciators
4. Release all magnetically-held and electrically-held hinged doors
5. Release all exit doors controlled by electric locks for access control
6. Cause all electrically-operated security closures occurring in the path of egress to open
7. Provide a dry contact closure for the Energy Management System (EMS)
8. Report alarm condition to an approved Central Reporting Agency

E. Upon activation of a corridor smoke detector, the fire alarm system shall close all smoke dampers in addition to causing the aforementioned operations. The fire alarm system shall shut down the AHU and fans directly (all units 2,000 cfm and greater) and provide a contact closure to the EMS system to notify EMS of the fire alarm shutdown event.

F. Upon activation of a smoke detector adjacent to an air transfer duct, the fire alarm system shall close the associated smoke damper, in addition to causing the aforementioned operations.

G. Upon activation of a duct smoke detector associated with an air handing unit controlled by the Energy Management System (EMS), the fire alarm system shall shut down the AHU directly and provide a contact closure to the EMS system to notify EMS of the fire alarm shutdown event.

H. Upon activation of a duct smoke detector associated with an air handing unit not controlled by the Energy Management System (EMS), the fire alarm system shall shut down the associated air handing unit through the starter control circuit of the associated air handing unit.

I. Alarm devices may be silenced only by operating the proper “alarm silence” switch. Operation of the switch shall silence the audible signals only, and place the flashing alarm and/or trouble LED’s in a continuously illuminated condition. Subsequent activation of any alarm initiating device shall reactivate the alarm sequence. Restoring the initiating device to normal shall permit operation of the “reset” switch, thereby placing the system back to normal.

J. A “supervisory” condition shall be initiated under any of the following circumstances:

1. Tamper switch not in normal position
2. Manual fan shut-down through the fire alarm system
3. Activation of a duct smoke detector

K. A “trouble” condition shall be initiated under any of the following circumstances:

1. Open, short or ground on an initiation circuit
2. Open, short or ground on a signal circuit
3. Ground on any DC power line within the system
4. Removal of a control module
5. Removal of an alarm initiating device from its base
6. Smoke detector compensated beyond acceptable limits
7. Loss of normal building power
8. Loss of battery or auxiliary power

L. Supervisory and trouble conditions shall indicate visually with separate LED’s, and audibly with a sounding device in the control panel. Audible signals shall be distinct for supervisory and trouble conditions. Distinct supervisory and trouble signals shall also be transmitted to the Central Reporting Agency. Device and zone shall be identified on Control Panel annunciators and remote annunciators.

M. Alarm, supervisory and trouble conditions shall be available for chronological review on the display at the control panel.

N. System shall use building power for primary operation, with automatically charged, sealed maintenance-free batteries as secondary power. Batteries shall have capacity to operate the entire system, including central reporting communicator for the time duration required by code. Batteries shall automatically charge to 80% of full charge within 8 hours.

1.07 SPECIAL FEATURES

A. Alarm Verification: System software shall utilize a false-alarm prevention technique which shall retard the alarm for all smoke detectors. Alarm initiating devices other than smoke detectors shall initiate an immediate alarm. Smoke detectors shall initiate a pre-alarm indication for approximately 10 seconds, after immediate alarm. Smoke detectors shall initiate a pre-alarm indication for approximately 10 seconds, after which the control panel shall reset the detector. Activation of any other initiating device within 60 seconds shall initiate an immediate system alarm. A second alarm condition from the same device within the 60 second confirmation period shall also initiate a system alarm condition.

B. Analog Smoke Sensors: System software shall automatically adjust each analog smoke sensor approximately once each minute for changes in sensitivity due to the effects of component aging, environmental conditions and accumulation of dust. Each smoke sensor shall maintain its sensitivity at the pre-selected level. Sensitivity shall be programmed and displayed along a low-to-high sensitivity scale. The system shall automatically report a “dirty detector” trouble condition prior to the detector reaching the point where its sensitivity can no longer be maintained at the selected level. If the detector reaches the point at which the detector sensitivity can no longer be maintained at the pre-selected value, an “excessively dirty detector” trouble condition shall be reported. By appropriate manipulation of the panel keypad, I shall be possible to command the system to display or print a list of detectors that are within 10 analog units of reaching “dirty detector” status. The system shall monitor the peak value reported by each

detector, and shall display or print this information for all detectors upon command.

C. Smoke Sensor Testing: System software shall automatically and repeatedly test each analog smoke sensor. The test shall be a recognized functional test of each photocell as required annually by NFPA 72. Failure of an analog smoke sensor shall activate the system trouble circuitry, display a “Test Failed” indication, and identify the individual detector.

D. Walk Test: The control unit shall provide a dual-mode walk test program which shall enable one person to test the alarm/supervision status of each initiating device connected to the system. The walk test program shall include both an audible mode and a silent mode, each of which shall permit test data to be recorded to a print for historical reference. During walk-test, the control unit shall automatically reset after an alarm condition, enabling the testing technician to continue testing the system without requiring a return to the control panel. Walk-test shall not activate elevator recall, shut down mechanical equipment, release electrically-held overhead doors, or activate central reporting.

E. Multiplex Configuration: The system shall be designed to accommodate module placement at either the control panel or remote control cabinets. System shall utilize multiplex communications with a true distributed processing of system intelligence. Provisions shall be made to accommodate coding at all remote panels to be synchronized to the coding patterns generated at the central control panel to assure proper phasing of alarm signals. Provide network modules for wired data transmission.

F. Degraded Mode Operation: The system shall be capable of maintaining two degrade modes to assure maximum survivability of the system in the event of either the loss of system communications or failure of any/all microprocessors. In the event of a failure of the main system microprocessor, each subordinate processor shall be capable of operating a general alarm program. In the event of

multiple microprocessor failures, the system shall automatically operate in a general alarm configuration. Activation of any initiating device will automatically operate all notification devices and shall activate the central reporting function.

1.08 WARRANTY

A. In addition to the Contractor's warranty, the System Vendor shall warranty the entire fire alarm system to be in compliance with applicable codes and standards, and to be free from defects in materials and workmanship. This additional warranty shall extend for a period of one (1) year from the date of Substantial Completion of the Project and shall cover the full cost of all repairs and all replacement costs for the entire system. Include warranty certificate in the Operating & Maintenance Manuals.

1.09 SUBMITTALS

A. Installer Qualifications: For Fire Alarm System Installer

B. Product Data: For all equipment, addressable devices, signal devices, peripheral devices and cable

C. Shop Drawings: Battery calculations, voltage-drop calculations, tap settings, floor plans, wiring diagram and operation matrix

D. In addition to submitting the above information to the Owner's Representative for review, the same information shall also be submitted to each code-enforcing authority as required to obtain approval. Pay all review, permit and inspection fees required for approval of the fire alarm system work.

1.10 INFORMATION FOR OPERATING & MAINTENANCE MANUAL

A. Submittals: Information submitted for review, up-dated to record any changes

B. Test Reports: Record of all field test data. To include the "history report" and the "system report" from the fire alarm control panel.

C. Operation Instructions: Supply a detailed narrative description of the system operation. Indicate expansion capability, application conditions and limitations of use. Include manufacture's installation, operating and programming instructions.

D. Maintenance Instructions: List replacement parts, including source. Indicate recommended and required maintenance and testing procedures, and the intervals involved for each. List all individual system components that require periodic maintenance. Detail trouble-shooting procedures, including step-by-step instructions for all trouble signals annunciated by the system. Furnish service directory with names and telephone numbers to obtain service.

E. Certificates: Record of Completion in completed form

F. Warranty: Manufacturer's warranty certificate

**PART 2 – MATERIALS**

2.01 PRODUCTS

Control panels, expansion units, annunciators, etc. are based on the Silent Knight Fahrenhyt IFP-1000 Fire Alarm Control Panel – no substitutions. Devices shall use the IDP Protocol. All panels and devices shall have the latest version of firmware and software.

2.02 CONTROL PANEL

A. The fire alarm control panel (FACP) shall be the Silent Knight IFP-1000 analog addressable control panel. The FACP must have a 6 amp power supply and be capable of expansion to a maximum of 54 total amps via bus connected expander modules that supervise low battery, loss off AC and loss of communication.

B. The FACP must have Day/Night sensitivity capabilities on detectors and be capable of supporting 99 detectors and 99 analog addressable modules and expandable to a maximum of 1584 analog addressable points. This shall be accomplished via eight signaling line circuits (SLC) capable of supporting a

minimum of 99 detectors and 99 addressable module devices each. The communication protocol on the SLC loop must be digital.

C. The FACP must support a minimum of six programmable "Flexputs." The panel must have a built in 80 character LCD annunciator with the capability of having an additional eight supervised remote annunciators connected in the field.

D. The FACP must have a built in UL approved digital communicator. The communicator must allow local and remote up/downloading of system operating options, event history, and detector sensitivity data.

E. The FACP must automatically test the smoke detectors in compliance with NFPA standards to ensure that they are within listed sensitivity parameters and be listed with Underwriters Laboratories for this purpose.

F. The FACP must compensate for the accumulation of contaminants that affect detector sensitivity. The FACP must have day/night sensitivity adjustments, maintenance alert feature (differentiated from trouble condition), detector sensitivity selection, auto-programming mode (Jumpstart) and the ability to upgrade the core operating software on site or over the telephone.

G. The FACP shall have a Jumpstart feature that can automatically enroll all properly connected accessories into a functional system within 60 seconds of powering up the panel. Panels that do not have these capabilities will not be accepted.

H. The main communication bus (S-Bus RS485) shall be capable of class A or class B configuration with a total Bus length of 6,000 feet.

2.03 ANNUNCIATOR

The main control must have a built in annunciator with an 80-character LCD display and feature LED's for General alarm, Supervisory, System trouble, System Silence and Power. When in the normal condition the LCD shall display time and date based on a 200 year clock which is capable of automatic daylight savings time adjustments. All controls and programming keys are silicone mechanical type with tactile and audible

feedback. Keys have a travel of .040 inches. No membrane style buttons will be permissible. The annunciator must be able to silence and reset alarms through the use of a keypad entered code, or by using a firefighter's key. The annunciators must have twenty levels of user codes that will allow the limitation of operating system programming to authorized individuals.

2.04 DISTRIBUTED POWER MODULE

A. The contractor shall supply (where required) a power module model RPS-1000 compatible with the IFP-1000 fire alarm control panel. The power module must have 6 amps of output power, six notification circuits rated at 3 amps each, and two form C relay circuits rated at 2.5 amps at 24 volts DC. The six notification circuits shall have the same functionality as the notification circuits on the main panel. The RPS-1000 shall be capable of being connected via a RS-485 system bus (SBUS) at a maximum distance of 6000 feet from the main control panel. The power module shall contain an additional RS-485 bus that is completely compatible with all IFP-1000 add on modules including RA-1000 annunciators, 5824 serial/parallel modules and addressable devices. The power module will also act as a bus repeater so that additional RS-485 (modules) devices can be connected at a maximum distance of 6000ft. from the power module.

B. The contractor shall supply (where required) a power module model 5496 compatible with the IFP-1000 fire alarm control panel. The power module must have 6 amps of output power with four notification circuits rated at 3 amps each. The four notification circuits shall have the same functionality as the notification circuits on the main panel. The 5496 shall be capable of being connected via a RS-485 system bus (SBUS) at a maximum distance of 6000 feet from the main control panel.

C. The IFP-1000 shall be capable of supporting up to eight (8) of the Distributed Power Modules in any combination.

D. The power module's RS-485 bus shall be electrically isolated providing ground loop isolation and transient protection.

2.05 REMOTE ALPHA-NUMERIC ANNUNCIATORS

A. Annunciator shall have an alpha-numeric LCD display, 64-character minimum, which shall indicate all alarm signals received until the condition is cleared and the system is reset. The annunciator shall also include dedicated LED's and a tone alert for alarm, supervisory and trouble conditions, with an acknowledge push-button to silence the tone alert, but leave the LED illuminated until all conditions in that category are restored to normal. Annunciator shall have the capability to store and recall multiple alarms. Annunciator shall display alarms by building as well as individual device location and description. Operating power shall be derived from the control panel via a supervised circuit. Annunciator shall be flush-mounted, ivory in color. If flush mounting of the annunciator is not possible, then the unit shall be provided with the manufacturer's surface mount enclosure, ivory in color (surface mounting of the unit must be pre-approved by the school district's project manager).

2.06 ADDRESSABLE DEVICES

A. Manual Stations: Addressable, dual action type. Each manual station shall require a key to reset the actuated station. Manual stations shall be keyed to match control panels. Silent Knight #IDP-Pullda.

B. Heat Detectors: Analog addressable type. Each detector shall be a fixed temperature element. Fixed temperature element shall be set at 135 degrees F except where indicated otherwise (190 degrees F for high temp). Finish shall be white. Silent Knight #IDP-Heat and IDP-Heat-HT.

C. Smoke Detectors: Analog addressable photoelectric type. Smoke detectors located above ceiling, and in other locations where remote indicators are required, shall be equipped with auxiliary contacts rated 2 amps at 120 volts. Smoke

detectors that are directly connected to door release circuits shall be US listed for such use. Finish shall be white. Silent Knight #IDP-Photo.

D. Duct Smoke Detectors: Analog addressable photoelectric type, equipped with baffle, housing and two sampling tubes. Detector shall include auxiliary contacts rated 2 amps at 120 volts for remote indicator. Sampling tubes shall be sized to match the duct opening. Silent Knight #IDP-PhotoR with DNR housing.

E. Monitor Modules: Addressable module for monitoring peripheral non-addressable initiating devices, such as water-flow switches and supervisory tamper switches. Provide sufficient addressable monitor modules to provide addresses for all normally-open (N.O.) contact-initiating devices. Silent Knight #IDP-Monitor.

F. Control Modules: Output modules for connection to the same addressable loop as the addressable monitor devices. Control modules shall provide a Form C contact, rated 2 amps at 120 volts A.C. Provide control modules where necessary to provide a relay output for releasing door holder circuits, shutting down fans and similar control function. Silent Knight #IDP-Relay.

G. Signal Modules: output modules for connection to the same addressable loop as the addressable monitor devices. Signal modules shall provide a Form C contact, rated 2 amps at 120 volts A.C. Provide signal modules where necessary to provide a Style Y supervised notification circuit.

H. Beam Smoke Detector: Detector shall be an addressable, single-ended reflective design. Detector shall have an integral sensitivity test feature that allows annual maintenance testing using a remote test station. Silent Knight #IDP-Beam-T.

2.07 SIGNAL DEVICES

A. General: Alarm signals shall comply with UL 1971 and the Americans with Disabilities Act (ADA). Audible signals shall sound in accordance with a Code 3 temporal pattern. Strobes shall have a flash rate of 1 hertz. Wherever more than

one visual signal is visible from any one location, all visual signals shall be self-synchronized. The strobe intensity shall be 15 candela minimum, with a near-axis intensity exceeding 75 candela. Where so indicated and where required to comply with the aforementioned standards, strobe intensities of 30 candela, 60 candela and 110 candela shall be provided.

B. Audible/Visual Alarm Signals: Visual signals shall have xenon strobes behind protruding clear lenses with the work “FIRE” in red letters. Audible and visual signals shall have a common faceplate, and shall be designed to be mounted on a common flush-mounted back box. Finish shall be white for interior units and red for exterior units. The signaling appliance shall also have the capability to silence the audible signal while leaving the visible signal energized with the use of a single pair of wires.

C. Visual Alarm Signals: Xenon strobes behind protruding clear lenses with the word “FIRE” in red letters. Visual signals shall be designed to mount on a flush-mounted back box, and shall match the audible/visual signals in appearance. Finish shall be white for interior units and red for exterior units.

2.08 PERIPHERAL DEVICES

A. Isolated Loop Circuit Protectors: Transient protector with response time less than 5 nano-second line-to-line and 25 nano-seconds line-to-ground, capable of accepting an 8x20 micro-second pulse of up to 2000 amps and shunting it to ground. The circuit protector shall be small enough to mount in a 4 11/16” square by 2 1/8” deep box.

B. Interface Relays: SPDT with coil rated 24 volts A.C. or D.C. and contacts rated 10 amps at 120 volts A.C. Relay shall be U.L. listed for installation on a supervised circuit, and shall include an LED that illuminates when the relay is activated. Relay shall be self-contained in its own NEMA Type 1 enclosure.

C. Remote Indicators: Appropriately labeled LED and key operated test switch on a single-gang device plate.

D. End of line resistors shall be a factory made device with #18 AWG terminations similar to Silent Knight #SK-7628.

2.09 DEVICE PROTECTION

A. Guards shall be formed steel with flanges for attaching to wall surface. Guards shall have matte white finish. Guards for manual stations shall allow ready access to manual stations either through the front of the guard or by lifting a hinged guard.

2.10 RACEWAY

A. Where EMT raceway is used (in accordance with Section 16110), conduit shall be colored with a bright red topcoat.

2.11 BATTERIES

A. Batteries shall have posts that are spade type, ¼” wide.

2.12 WIRE AND CABLE

A. General: Wire size shall be THHN (THWN for wet locations), minimum 14 AWG (and may be stranded for fire alarm signal circuits only) or sized to allow 10% additional loading (minimum 2 additional devices). Power and grounding conductors shall be minimum 12 AWG THHN. All wire and cable shall be suitable for Fire Protective Signaling Circuit use. Minimum insulation rating shall be 300 volts. Cable shall be rated FPL or FPLP. Cables shall be installed in metallic raceway.

B. Addressable Loop Cable: Twisted-pair cable with drain wire and over-all jacket.

C. Conductor colors:

| | | |
|---|---|---|
| Horn Circuits: | Red (+) | Black (-) |

| | | |
|---|---|---|
| Indicating: | Orange (+) | Brown (-) |
| Control (Fan Shutdown) | Blue (+) | Yellow (-) |

2.13 ACCEPTABLE MANUFACTURES

A. System: Silent Knight Fahrenhyt IFP-1000 only. IDP (System Sensor) devices shall be used with the system (SD series devices not allowed).

B. Beam Smoke Detector: System Manufacturer.

C. Signal Appliances: System Manufacturer

D. Isolated Loop Circuit Protectors: System Manufacturer

E. Interface Relays: System Manufacturer

F. Protective Covers: Safety Technology or System Manufacturer

G. Security Guards: Chase Security of System Manufacturer

H. Cable: Alpha, Belden, Carol, West Penn.

I. No substitutions allowed on manufacturers listed above unless prior approved.

**PART 3 – EXECUTION**

3.01 PREPARATION

A. Prior to beginning rough-in for the fire alarm system, the Contractor shall arrange a pre-installation meeting on the site between all parties involved in the fire alarm system installation, including the Fire Alarm System Vendor, the Fire Alarm System Installer and the Electrical Systems Installer. All parties shall review the fire alarm system shop drawings, the manufacturer's installation instructions, applicable codes and standards, the requirements of the local AHJ and any site conditions pertinent to installation of the fire alarm system.

B. Contractor shall provide a list of personnel names with their respective NICET certification numbers to the Owner at the time of the pre-installation meeting.

C. Discussion of fire alarm control panel device listing to be made available to the Owner for review and corrections prior to programming of the fire alarm control panel.

D. The Contractor shall prepare minutes of the pre-installation meeting and distribute them to all parties in attendance at the meeting, and to the Owner's Representative.

3.02 INSTALLATION

A. Switchover from the existing functional system to the new functional system shall be accomplished within 48 hours and 24 hours before the end of the normal work week. Existing manual pull stations, bells, etc. shall be removed and cover plates installed. All conductors shall be removed from the raceway. If conductors are unable to be removed, the box cover shall be labeled on the inside of the cover with a labeler printed label noting "Abandoned Fire Alarm". Any surface mounted raceway no longer used shall be removed and paint touched up on wall with matching color.

B. Fire alarm conductors shall not share raceway with any other system conductors.

C. Backboards shall be furnished and installed by the Electrical Contractor. Backboard shall be 3/4" plywood (AD grade), one side finished smooth (mounted outward), painted with two coats of white fire retardant paint. Size as required to accommodate installed equipment.

D. Junction boxes for fire alarm systems shall be red in color. Junction boxes shall be permanently marked with an adhesive label reading "Fire Alarm" (WAC 296-46B-760).

E. Wiremold 500, 700 and 2000 product shall be used as raceway unless EMT painted to match existing background color as stated on the Drawings.

F. The 40% raceway fill factor shall be applied to all raceways.

G. Installation of equipment, devices, wire and cable, including terminations, programming, adjusting, testing, and demonstration shall be performed by an installer qualified to perform fire alarm system work, as specified herein.

H. All personnel working on the fire alarm system shall be NICET Level 2 Certified and have a City of Spokane Fire Department License. A list of NICET Level 2 personnel with their respective NICET certification numbers working on the job shall be provided to the Owner prior to the start of work.

I. Final connections between the wiring system and the equipment shall be made under the supervision of a representative of the System Vendor. Equipment shall not be energized until all connections have been approved by the System Vendor.

J. Fire alarm equipment and devices shall be protected from dust during construction. Smoke detector heads shall be installed only after dust-producing activities have completely ceased, building surfaces have been finished and clean-up by all trades has been completed. The plastic covers shipped with the detectors are for protection during shipping and storage, and are not suitable to protect detectors from construction dust.

K. Provide back boxes matched to the device or equipment in all cases. Back boxes and cabinets shall be plumb and perfectly aligned.

L. Leave 8-inch wire pigtails at each device box and 36-inch wire pigtails at the fire alarm control panel for termination by NICET Level 2 certified fire alarm personnel.

M. All wiring shall be installed in a metallic raceway system arranged as shown on the shop drawings. The conduit arrangement shown on the Contract Drawings is illustrative only, and shall not relieve the Contractor from responsibility to provide separate conduit for wiring connected to different class power supplies in accordance with NEC Article 760. Where EMT raceway is used (in accordance with Section 16110), conduit shall be colored with a bright red topcoat.

N. Exterior horn/strobe boxes need a weep hole drilled in the bottom to allow condensation to drain. Raceway interior entering the exterior J-box shall be caulked to prevent movement of moisture into the interior of the building. The exterior of the raceway/building penetration shall be sealed per Specification 16010, 3.05 D and 16110, 3.07, A.

O. Guards: fire alarm horn/strobes, manual stations and remote test stations installed in the Gymnasium, Wrestling, Weight Training, Fitness areas and on the exterior of the building shall have guards.

P. Maintain consistent color-coding of conductors throughout the project. Wiring in cabinets and terminal boxes shall be neatly arranged and bundled with velcro wire ties.

Q. All resistor leads shall be insulated using a tube insulation method.

R. Identify both ends of all wiring and cabling with zone, area, floor, etc. to match identification on wiring diagram. Wire markers shall be located adjacent to connection points where easily visible. Marking system shall be made using a Brady BMP21 label printer with ¾” labels or approved labeling method.

S. Label all smoke, duct smoke, heat detectors, pull stations, control relays, etc. with ID number using an electronic labeling printer (similar to those as manufactured by Brother or the Brady BMP21 label printer). Label shall be 1/4” red lettering on white background. Device label shall match as-built drawings and programming entries.

T. Label all batteries with the installation date using an electronic labeling printer (similar to label printer noted above).

U. Panels containing batteries shall not have raceway penetrating the bottom of the panel (causes problems with placement of batteries). Batteries shall be installed in the unit’s upright position.

V. Conductor color-coding shall follow that as outlined in section 2.14, C.

W. Provide isolated loop circuit protectors on all initiating, indicating and signaling circuits extending beyond the building perimeter, including addressable loop and annunciator communications lines and associated shielding. Locate the protectors as close as practical to the point where the circuits enter and leave the building. Connect the ground terminal of protector to the building grounding system with a grounding conductor no smaller than 12 AWG.

X. Locate ceiling-mounted smoke detectors at least 48” from supply air diffusers, at least 12” from return air grilles and 12” from walls.

Y. Locate ceiling mounted detectors (both smoke and heat) so that they are easily accessible for future testing using pole mounted test equipment operated from the floor level.

Z. Locate heat detectors which are in concealed areas (i.e. chair storage areas under gym platforms/stages) so that they are readily accessible for future testing.

AA. Locate duct smoke detectors in straight lengths of duct where they will be readily accessible for maintenance and cleaning. Avoid locations near duct openings, connections to branch ducts and duct turns. Arrange duct smoke detectors and sampling tubes to monitor the entire duct per the manufacturer’s recommendations. Where sampling tube length exceeds 3 feet, support tube at opposite end from duct smoke detector. Where this requirement cannot be fulfilled with a single detector, provide additional duct smoke detectors as required for proper operation.

BB. Install duct smoke detectors after the interior of the ductwork is clean and free of dust. Seal tightly at point of duct penetration and repair insulation.

CC. Where smoke detectors or duct smoke detectors are located above ceilings or otherwise are not readily visible, provide remote indicator lights equipped with key operated test switches. Provide a permanently attached placard indicating the location of the detector and the area served.

DD. The specified alarm signal and their placement on the drawings are intended to be appropriate to achieve the required level of audibility and visibility. It shall be the responsibility of the System Vendor to assure himself that the design is adequate per applicable codes. If additional signals are required to meet code standards they shall be provided at no additional cost to the Owner.

EE. Provide and connect interface relays as required to accomplish control functions included in the description of system operation. Control relays shall be located within 36” of the device or controller that is to be controlled, except in the case of door holders for hinged doors, which is considered a fail-safe requirement. The purpose of the requirement is to provide supervision of the control circuit up to the interface relay.

FF. Connect miscellaneous peripheral devices to the fire alarm system, including sprinkler water flow switches, supervisory tamper switches, kitchen hood control panels, fire suppression systems, elevator recall, kitchen rollup door drop and similar equipment.

GG. Connect the fire alarm control panel to the existing U.L. listed security panel for fire alarm system reporting to the Central Station in accordance with the requirements of the local Fire Department. The fire alarm system shall be connected to transmit alarm, supervisory and trouble conditions with the alarm signal having priority over the other signals

HH. Trouble, alarm and supervisory reporting shall connect to the following terminals of the Fahrenhyt IFP-1000 Silent Knight Panel: Trouble (“trouble” terminals #30-32), Alarm (“relay 1” terminals #27-29) and Supervisory (“relay 2” terminals #24-26).

II. Contractor shall remove any existing unused raceway and conductors from the prior fire alarm system. Walls in finished areas shall be touched up with paint to match existing color.

JJ. Any data cabling (blue jacketed, or white for plenum rated Cat 5e) provided in this project to connect to the site's network system shall be installed by a full Leviton Certified Cable System (CCS) company to maintain the schools district's existing data system warrantee by Leviton. All equipment and installation of the data cable connection shall meet the requirement of the Leviton system warrantee. The companies meeting this criteria in the Spokane, Washington area are as follows:

1. Cochran Technologies, Spokane, Keith Meehan
2. E3 Solutions, Inc., Yakima, Derek Karel
3. Evergreen Technologies, Spokane, Brad Murray
4. Interwest Communications, Wenatchee, Aren Magnussen
5. Interwest Technology Systems, Inc., Richland, Joe King
6. Powercom, Inc., Spokane, Pete Job
7. System Tech, Spokane, Scott Conner

3.03 MOUNTING HEIGHTS

A. Back boxes shall be mounted at the heights noted on the drawings. Where not otherwise indicated, the following mounting heights shall be observed:

1. FACP – Display/readout at 66"
2. Remote Annunciators – 54" to top
3. Remote Control Panels – 54" to top
4. Manual Stations – 48" to Top
5. Remote Test Station – 60" to Top
6. Alarm Signals – Noted below

B. If ceiling heights allow, wall-mounted appliances shall have their tops above the finished floors at heights of not less than 90 inches and below the finished ceiling at distances of not less than 6 inches (2002 NFPA 72, 7.4.6.1 referenced).

C. For combination audible/visible appliances, the location of the installed appliance shall be such that the entire lens is not less than 80 inches and not greater than 96 inches above the finished floor (2002 NFPA 72, 7.4.6.3 and 7.5.4 referenced).

D. All devices of like type shall be installed at the same height (as noted above, in compliance with Code) throughout the building for a uniform installation appearance.

3.04 PROGRAMMING

A. The fire alarm system shall be programmed to function as specified under the description of system operation, including special features. Programming shall comply with requirement of the AHJ and with direction received from the Owner's Representative.

B. All device point names in the programming shall be descriptive of the device location, and if the number of characters in the field allows, the device description (it has been found that the fields do not have enough characters allotted to allow the device description, so the device location is more important). Default point name assignments are not acceptable (i.e. "module 33 point 75"). The nearest room number (room must have room number signage readily visible to a building occupant) shall be given first, followed by the room description as data entry space allows. An acceptable example is "Room 231 – Science Lab". For corridors (primary hall/passage ways), hallways (secondary hall/passage ways) and stairways, the device shall be labeled as follows:

Corridor – by Rm 152
Hallway – by Rm 132
Stair – by Rm 202

The 'Rm' notation may be left off (leaving only the actual room #) if the number of characters is limited in the programming field. Also, corridor and hallway may be abbreviated (Corr & Hall) as necessary to fit within the programming field.

C. Relay names in the programming shall note the location and what they control.

D. Programming shall be performed by an authorized manufacturer's representative.

E. The contractor shall also deliver to the Owner a copy of the system program in electronic format. The electronic file shall be delivered on CD-ROM media. The Contractor shall also deliver to the Owner all auxiliary programs and patch cables required to load the program into the fire alarm system memory.

F. Fan shutdown shall be standardized on point #127, or as approved by the school district project manager. Fans shall be zoned as a group to allow shutdown bypass during fire alarm testing.

G. Damper control shall be zoned as a group to allow bypass of closing dampers during fire alarm testing.

H. Trouble signal due to loss of power to the fire alarm control panel shall be programmed for a 15 second delay to account for loss of power due to generator set power switchover exercising.

3.05 ADJUSTMENT, TESTING & DEMONSTRATION

A. Records of all tests, including expected test results, actual test results, and corrective actions taken, shall be maintained during testing and shall be submitted by the Contractor.

B. Test all fire alarm system wire and cable after installation and prior to connection to equipment. Tests to be performed shall include, but not be limited to the following:

1. Conductor continuity
2. D.C. insulation resistance
3. Freedom from shorts and grounds

C. Test all system features for proper function. Tests shall be conducted by a manufacturer's representative after the system has been connected to the central

monitoring agency. Notify the central monitoring agency prior to the tests. Tests to be performed shall include, but not be limited to, the following:

1. Simulate supervisory and trouble conditions and verify operation
2. Verify proper operation of each manual station and each heat detector
3. Verify proper operation of each duct smoke detector
4. Verify beam smoke detector operation for alarm and trouble conditions
5. Measure the pressure differential across the sampling tubes at each duct smoke detector using a manometer wile the air handling system is operating normally
6. Verify proper operation of each ceiling smoke detector by simulating smoke
7. Verify proper operation of peripheral devices
8. Verify proper annunciation of each alarm, trouble and supervisory condition
9. Verify proper operation of each door-closing device while testing the associated detectors
10. Verify proper operation of the shut-down sequence for each air handing unit while testing the associated detectors
11. Verify proper operation of each smoke damper while testing the associated detectors
12. Verify proper operation of each control device on all control panels
13. Verify proper operation of each alarm signal device
14. Measure sound decibel levels in each occupied room under finished conditions with all signal devices operating
15. Furnish documentation that all alarm, supervisory and trouble conditions were correctly reported to the central monitoring agency.
16. Demonstrate to school district’s electrical foreman that the alignment of each beam detector is within the manufacturer’s specifications.

17. Measure and record the current draw at the batteries for each panel under full load alarm condition. Also measure and record the voltage reading during full load alarm condition at the furthest device on each notification circuit. These measurements are to be included in the record documents.

D. The "history report" and the "system report" from the fire alarm control panel shall be provided to the District's electrical shop foreman 24 hours prior to the scheduled final test with the City of Spokane.

E. Testing of smoke and heat detectors shall utilize manufactured testing devices designed and approved for the use. No testing shall utilize open flame, heat gun or similar non-approved methods. Also, testing of detectors using a magnet will not be allowed.

F. Any deficiencies discovered as a result of the above testing shall be corrected and the Work affected by such deficiencies shall be completely re-tested at the Contractor's expense.

G. After the complete system has been tested and is operating properly, the manufacturer's representative shall test and demonstrate each fire alarm device and function in the presence of the Authority Having Jurisdiction (AHJ) as required to obtain approval of the system. A representative of Spokane Public Schools shall be in attendance. Any additional programming, adjustment or testing required by the AHJ shall also be performed by the manufacturer's representative at no additional expense.

H. Contractor shall provide an up-to-date drawing showing all panels, devices and information as noted in paragraph 3.08, B, 1, a in this Specification.

I. When testing the fire alarm system at any time, the Contractor shall lock out all HVAC equipment from shutdown (problems resulting in maintenance costs have been experienced in the past from multiple shutdown/startups of the HVAC due to fire alarm testing – Contractor may be responsible for any repair costs to HVAC

equipment resulting from failure to lockout the HVAC equipment during fire alarm testing).

J. Contractor shall notify the Owner's Representative at least one (1) week in advance of the dates when the above testing and demonstration will be performed, so that test may be witnessed.

K. Instruments, gauges, testing equipment, protective devices and safety equipment for all testing shall be provided by the Contractor.

3.06 VERIFICATION OF COMPLIANT SYSTEM

A. The verification shall ensure that the installed system includes all required components and functions, that those components and functions are installed and operate as required, that the system has been 100% acceptance tested and that all required documentation has been provided to the system owner. For supervising station systems, the verification shall also ascertain proper arrangement, transmission, and receipt of all signals required to be transmitted off-premises.

B. Verification shall include confirmation that any required corrective actions have been completed.

C. Verification statement shall be included in the Record Documents submittal.

3.07 APPROVAL AND ACCEPTANCE

A. At the authority having jurisdiction's request, complete information regarding the system or system alterations, including specifications, shop drawings, battery calculations, and notification appliance circuit voltage drop calculations shall be submitted for approval.

B. The installing contractor shall furnish a written statement stating that the system has been installed in accordance with approved plans and tested in accordance with the manufacturer's specifications and the appropriate NFPA requirements.

C. The Contractor shall certify completion of the fire alarm system installation and testing in accordance with the plans approved by the AHJ, the manufacturer's instructions and applicable codes and standards. Written certification shall be submitted to the AHJ at completion of the work. Once final approval of the entire fire alarm system is obtained from the AHJ, the original copy of all Record of Completion certificates, together with the requisite Inspection and Testing Forms, shall be delivered to the Owner's Representative and photocopies shall be included in the Operating & Maintenance Manuals.

3.08 ON-SITE TRAINING

A. The Contractor shall provide four (4) hours minimum of training for the Owner's staff in the operation of the fire alarm system. In addition, the Contractor shall provide eight (8) hours minimum of further training for the Owner's maintenance personnel in the maintenance and instruction for installer level programming of the fire alarm system. Training time shall be for the Owner's maintenance personnel in the maintenance of the fire alarm system. Training time shall be extended as necessary to satisfy the Owner's representative that all pertinent topics have been adequately covered.

B. On-site training with system checkout shall be conducted after all items below are completed and submitted to the Owner prior to the training session:

1. As built drawings (3 copies) are to include the following:

a. Floor plan(s) shall show equipment and detector locations (with ID number) and zone boundaries. Relays and damper locations shall be shown. Relays shall be noted as to what they control. ID shall match devices and programming entries.

b. Riser and wiring diagrams for the system, showing all ID numbers associated with detectors, equipment and field wire labeling.

c. Shop drawings including battery calculations, notification appliance circuit voltage drop calculations, wire size, etc.

d. Documented current draws and voltages as defined in paragraph 3.05, 17 of this Specification and the battery voltage and amp-hour rating of the batteries affiliated with those measurements.

2. Operation and Maintenance manual for the system (3 copies)

3. Work with school district's electrical shop foreman to install/update the fire alarm system software on five (5) district electrical shop laptop computers.

C. A training plan shall be submitted in advance for acceptance. The training plan shall outline the topics to be covered, the publications to be used, and the training schedule.

D. The training shall be conducted by a representative of the System Vendor who is thoroughly familiar with the equipment and its features, and also with the installation on this project. The training shall include instruction and over-the-shoulder hands-on training. As a minimum, the training shall cover, but not be limited to, the following topics:

1. General overview of system features, including expansion capability
2. Interpretation of system outputs (signal tones, annunciator displays, printouts)
3. Operation of system controls (fire drill, acknowledge, silence, reset)
4. Programming of system
5. Recommended and required maintenance procedures and intervals
6. Detailed trouble-shooting instructions for each trouble condition annunciated by the system.
7. Explanation of service agreement options
8. Installer level programming

3.09 RECORD DOCUMENTS

A. Complete and accurate record drawings (including the as-built requirements above and other required submittals) are important to the Owner. Proper documentation eliminates a significant amount of time and expense when maintenance, repair, alterations or expansion becomes necessary.

B. Drawings shall include a floor plan showing equipment and detector locations (with ID number) and zone boundaries, riser and wiring diagram for the system showing all ID numbers associated with detectors and equipment. Relays and damper locations shall be shown. Relays shall be noted as to what they control. ID shall match devices and programming entries. Drawings to be submitted in hard copy as well as electronic AutoCAD format on CD-ROM or DVD-ROM disc.

C. The Owner will not consider the obligations of the contract as being fulfilled, and will not grant final acceptance off the work of the contract until satisfactory record drawings (and other required submittals) have been received and reviewed.

D. All fire alarm systems that are modified after the initial installation shall have the original record of completion revised to show all changes from the original information and shall include a revision date.

E. O&M manuals and as-built drawings as noted in paragraph 3.08, B in this Specification.

F. Documents discussed in paragraph 3.07, C in this Specification.

G. Listing of devices, their model number and quantity of device types.

H. Copy of the verification statement noted in paragraph 3.06 in this Specification.

3.10 SPARE EQUIPMENT

A. Provide the Owner with the following spare equipment. Deliver spare equipment to the Owner in the original factory packaging.

1. Smoke Detectors: 3% of total installed, minimum 2
2. Heat Detectors: 3% of total installed, minimum 2
3. Manual Stations: 3% of total installed, minimum 2
4. Addressable Modules: 5% of total installed, minimum 2

B. Other

1. Provide all pull station/ test switch keys to the Owner
2. Provide to the Owner, items necessary to test the beam smoke detector

3.11 SERVICE AGREEMENT

A. Prior to Substantial Completion, the System Vendor shall offer a service agreement to the Owner for testing and maintenance of the fire alarm system. If accepted by the Owner, the service agreement shall take effect at the expiration for the Contractor's one year guarantee.

3.12 RECORD OF COMPLETION FORM

A. The following form is taken from the 2009 Edition of the National Fire Alarm Code and is to be completed by the Contractor's qualified and experienced person in accordance with the following paragraphs:

1. A preliminary copy of the record of completion shall be given to the system owner and, if requested, to other authorities having jurisdiction after completion of the installation wiring tests. A final copy shall be provided after completion of the operational acceptance tests.
2. When more than one contractor has been responsible for the installation, each contractor shall complete the portions of the form for which that contractor had responsibility.

B. All forms shall be typed, not hand written.

END OF SECTION 16720

C. Cable supports and wraps.

1. Cable J-Hook

a. Approved manufactures are Caddy, B-Line, or equal.

b. Bridal rings are not approved for use.

c. J-Hook width shall be minimum 3/4". Provide size appropriate for conductor quantity. Multi-Tier J-Hooks shall be provided to separate different low voltage systems where a common route or pathway is used.

2. Tie-Wrap:

a. Approved manufactures are Leviton or equal.

b. Tie-Wraps shall be recloseable loop wrap style. Available in 1/2" wide, 15'-75'bulk rolls of Hook and Loop Wrap.

c. Plastic fasteners are not approved for use.

Table updated

2.02 CABLE

A. Division 16 shall furnish and install the following cable types from each device. The following cable is distributed by Anixter, Kent, WA 1-800-426-7665.

| ACCESS CONTROL DEVICE | CABLE DESCRIPTION | CAT. NO. |
|---|---|---|
| 1. Door Position Switch | 4C #22 OAS Yellow Plenum | Tappan # 2280AB4M/CMP-YE |
| 2. Electric Strike | 4C #18 OAS Yellow Plenum | Tappan # 1880AB4M/CMP-YE |
| 3. Request-to-Exit Pushbutton | 4C #22 OAS Yellow Plenum | Tappan # 2280AB4M/CMP-YE |
| 4. Request-to-Exit Motion Detector | 4C #22 OAS Yellow Plenum | Tappan # 2280AB4M/CMP-YE |
| 5. Proximity Card Reader | 6C #22 OAS Yellow Plenum | Tappan # 2280AB6M/CMP-YE |
| 6. Proximity Arming Reader | 6C #22 OAS Yellow Plenum | Tappan # 2280AB6M/CMP-YE |

TABLE UPDATE
ADENDUM #1
2 PAGES

| SECURITY SYSTEM DEVICE | | CABLE DESCRIPTION | CAT. NO. |
|---|---|---|---|
| 7. | Addressable POPIT | 4C #18 OAS Yellow Plenum | Tappan #1880AB4M/CMP-YE |
| 8. | Door or Window Position Switch | 4C #18 OAS Yellow Plenum | Tappan #1880AB4M/CMP-YE |
| 9. | Glass Break Detector | 4C #18 OAS Yellow Plenum | Tappan # 1880AB4M/CMP-YE |
| 10. | Removable Center Mullion | 4C #18 OAS Yellow Plenum | Tappan # 1880AB4M/CMP-YE |
| 11. | Arm/Disarm Keypad | 4C #22 OAS Yellow Plenum | Tappan # 2280AB4M/CMP-YE |
| 12. | Blue Strobe/Security Siren | 4C #18 OAS Yellow Plenum | Tappan # 1880AB4M/CMP-YE |
| 13. | Temperature Monitoring Sensor | 4C #18 OAS Yellow Plenum | Tappan # 1880AB4M/CMP-YE |
| 14. | Overhead Door Contact | 4C #18 OAS Yellow Plenum | Tappan # 1880AB4M/CMP-YE |
| 15. | Sounder (Piezo) | 2C #18 OAS Yellow Plenum | Tappan # 1880AB2M/CMP-YE |
| 16. | Sargent Electric Latch Retraction Device "Lock" | 4C #18 OAS Yellow Plenum | Tappan # 1880AB4M/CMP-YE |
| 17. | McKinney Electric Hinge | (1) 4C #18 OAS Yellow Plenum | Tappan # 1880AB4M/CMP-YE |
| 18. | Lock Down Pull Station to Galaxy Head End Equipment | (1) 4C #18 OAS Yellow Plenum | Tappan # 1880AB4M/CMP-YE |
| | CAMERA DEVICE | CABLE DESCRIPTION | CAT.NO. |
| 19. | PTZ Camera Indoor or Outdoor | (1) 6C #18 OAS Yellow Plenum<br>(1) CAT 5E Yellow Plenum | Tappan # 1880AB4M/CMP-YE<br>CAT 5E per Requirements of Specification 16756 |
| 20. | Interior Fixed IP PoE Camera | (1) CAT 5E Yellow Plenum | CAT 5E per Requirements of Specification 16756 |
| 21. | PoE Midspan Power Injector | (2) 3 Foot CAT 5E Yellow Plenum Patch Cord<br>(1) 110 volt outlet for AC Power | Leviton |
| 22. | Exterior Fixed IP Camera | (1) 6C #18 OAS Yellow Plenum<br>(1) CAT 5E Yellow Plenum | Tappan # 1880AB4M/CMP-YE<br>CAT 5E per Requirements of Specification 16756 |
| 23. | Video Monitor | (1) RG-59 Shielded Plenum<br>(1) 110 Volt outlet for AC Power | White Cable Jacket |
| 24. | Fire Alarm reporting for Alarm, Trouble, Supervisory | (3) 2C #18 OAS Yellow Plenum | Tappan # 1880AB2M/CMP-YE |

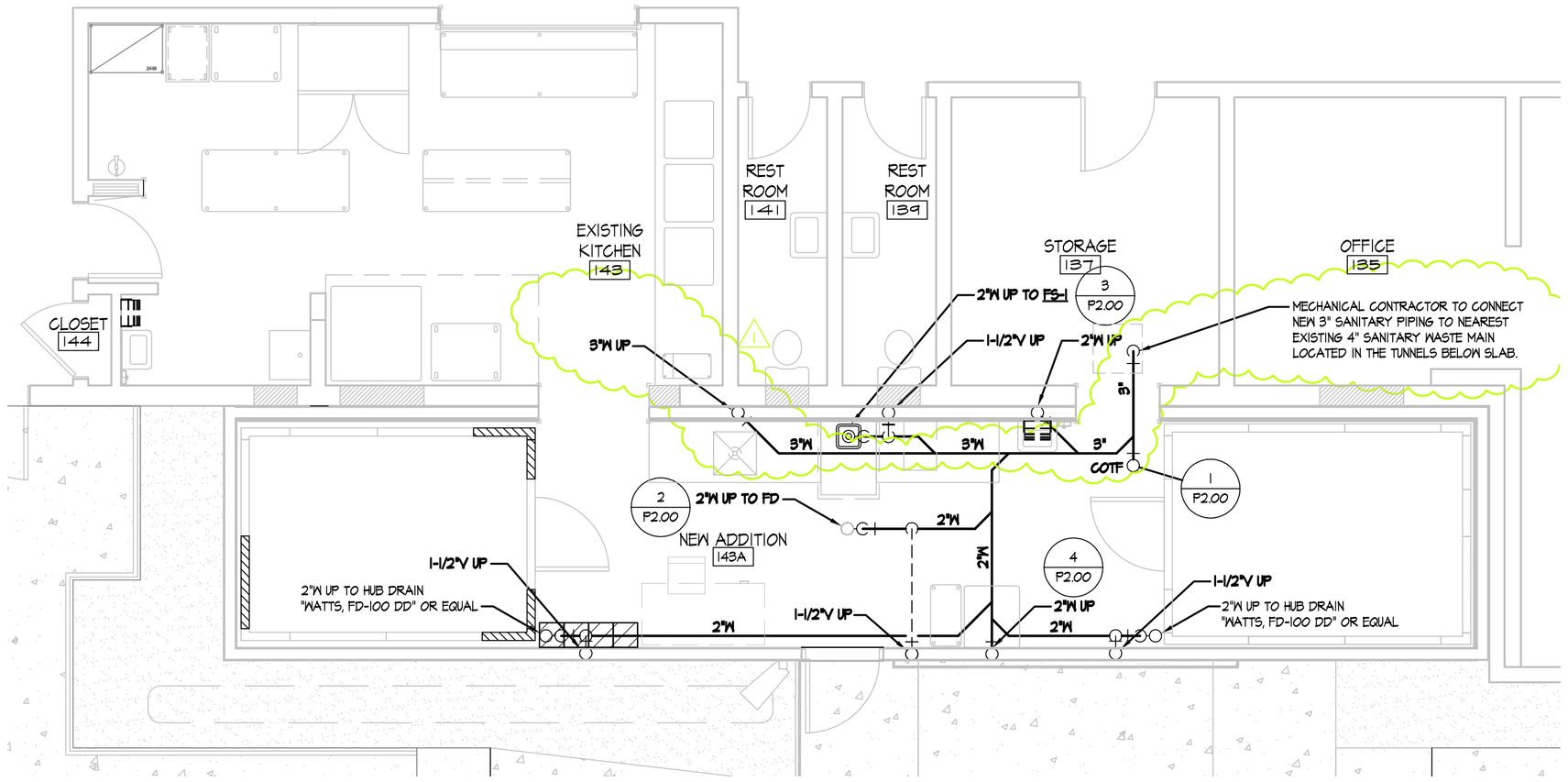


## FOUNDATION PLUMBING

1/4" = 1'-0"

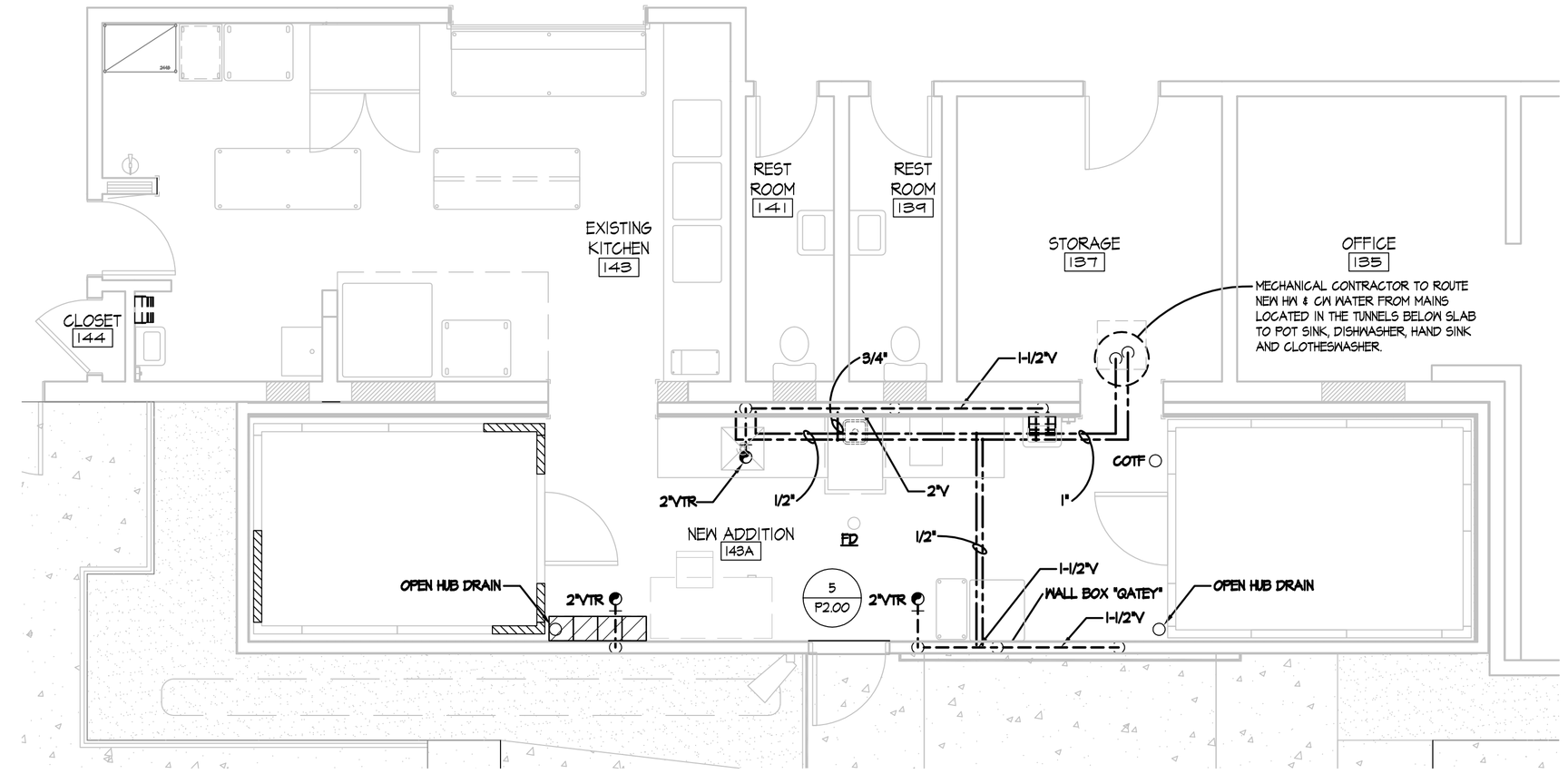


## MAIN FLOOR PLUMBING

1/4" = 1'-0"

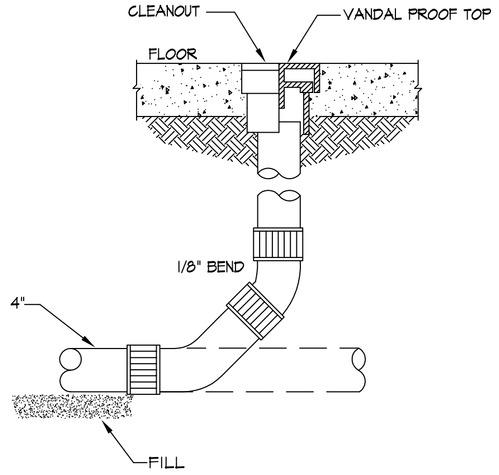


1 P2.0 CLEANOUT TO FLOOR

NOT TO SCALE

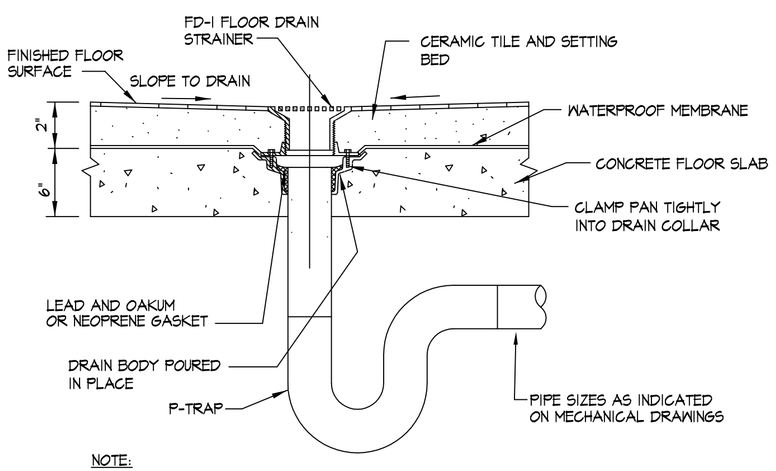


NOTE:
IF INDICATED FLOOR FINISH DOES NOT APPLY, REFER TO ARCHITECT'S DRAWING.

2 P2.0 FLOOR DRAIN

NOT TO SCALE

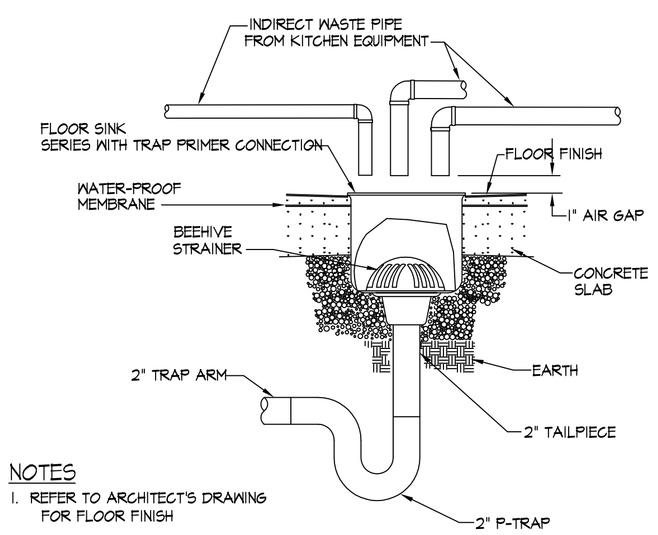


NOTES

1. REFER TO ARCHITECT'S DRAWING FOR FLOOR FINISH

3 P2.0 FLOOR SINK

NOT TO SCALE

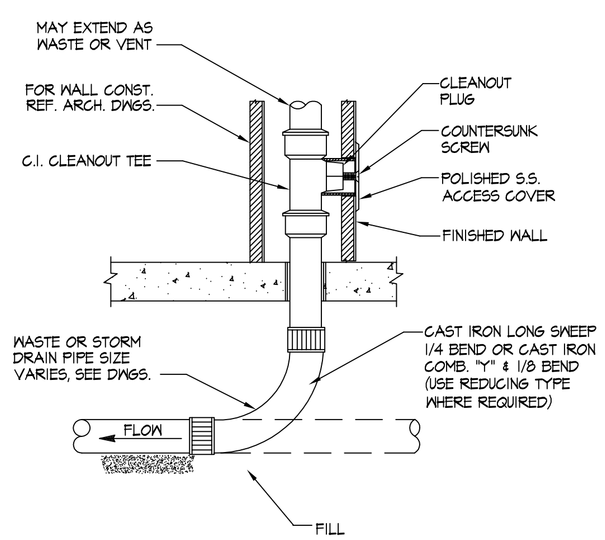


4 P2.0 SANITARY OR STORM WALL CLEANOUT NEAR BASE OF MAIN LEVEL FLOOR

NOT TO SCALE

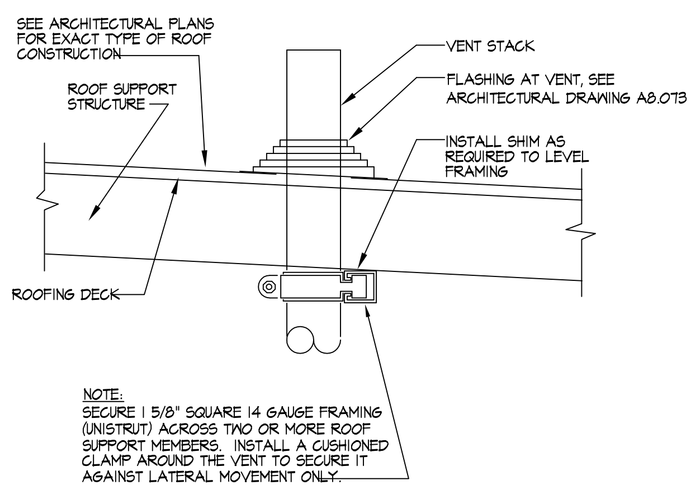


NOTE:
SECURE 1 5/8" SQUARE 14 GAUGE FRAMING (UNISTRUT) ACROSS TWO OR MORE ROOF SUPPORT MEMBERS. INSTALL A CUSHIONED CLAMP AROUND THE VENT TO SECURE IT AGAINST LATERAL MOVEMENT ONLY.

5 P2.0 VENT THROUGH ROOF

NOT TO SCALE

## GENERAL NOTES

1. DRAWINGS ARE PARTLY DIAGRAMMATIC AND DON'T NECESSARILY SHOW EXACT CONDITIONS OF CONSTRUCTION. LOCATION OF PIPING SHALL BE FIELD VERIFIED TO DETERMINE THAT IT CLEARS ALL OPENINGS AT STRUCTURAL MEMBERS, CHASES AND THAT IT MAY BE PROPERLY CONCEALED AND THAT LIGHTS, EQUIPMENT, ETC. HAVING FIXED LOCATIONS WILL BE CLEARED. DRAWINGS DO NOT ATTEMPT TO SHOW COMPLETE DETAILS OF BUILDING CONSTRUCTION WHICH AFFECT MECHANICAL PLUMBING INSTALLATION. CONTRACTOR SHALL REFER TO ARCHITECTURAL, STRUCTURAL, MECHANICAL AND ELECTRICAL DRAWINGS FOR ADDITIONAL BUILDING DETAILS WHICH AFFECT INSTALLATION OF HIS WORK.

2. PLUMBING/PIPING SYSTEM IN BUILDING SHALL BE INSTALLED IN A WORKMAN-LIKE MANNER IN CONFORMITY WITH THE PROVISIONS AND INTENT OF ALL CODES AND ORDINANCES, INCLUDING UPC AND LOCAL BUILDING CODES. LOCAL CODES AND ORDINANCES TAKE PRECEDENCE OVER THAT SHOWN HEREIN. IF THEY ARE MORE RESTRICTIVE THEY DO NOT RELIEVE THE CONTRACTOR OF THE REQUIREMENTS SHOWN HEREIN WHEN THEY DO CONFLICT.

3. PROVIDE PIPE SLEEVES IN FLOORS, WALL, PARTITIONS AND OTHER BUILDING CONSTRUCTION AS REQUIRED. WHEN PIPE IS INSULATED, INSULATION SHALL PASS CONTINUOUSLY THROUGH SLEEVE. CAULK SPACE BETWEEN PIPE AND SLEEVES IN EXTERIOR OR FOUNDATION WALLS WATERTIGHT USING LINKSEAL "PYRO-PAK" SEALS FOR NEW PIPING. OTHER SLEEVE PENETRATIONS SHALL BE PACKED WITH GLASS FIBER AND SEALED WITH NON-HARDENING PLASTIC CEMENT OR WITH 3M FIRE BARRIER CAULK CP-25 OR 3M PUTTY 303. REFER TO IPC CODES FOR SPECIFIC REQUIREMENTS REGARDING FIRE WALL PENETRATIONS. COMPLY WITH ALL REQUIREMENTS.

4. WHEN PIPES ROUTE THRU WALLS, FLOORS, AND CEILINGS, CONTRACTOR TO PATCH AND PAINT OPENINGS TO MATCH.

5. HORIZONTAL PIPES EXTENDED, CONNECTED TO EQUIPMENT, SHOULD RUN AT HIGHEST POSSIBLE ELEVATION ABOVE FLOOR, TO PROVIDE CLEARANCE FOR CLEANING. PIPES WILL NOT REST ON FLOORS.

6. CONTRACTOR TO COORDINATE INSTALLATION OF HIS TRADE WITH OTHER TRADES. SPACE CONFLICTS SHALL IMMEDIATELY BE BROUGHT TO THE ATTENTION OF THE OWNER OR OWNER'S REPRESENTATIVE PRIOR TO INSTALLATION. RELOCATION OR REROUTING OF PIPING/EQUIPMENT DUE TO LACK OF CONTRACTOR COORDINATION SHALL BE DONE AT CONTRACTOR'S EXPENSE. NOT AT OWNERS EXPENSE.

7. CONTRACTOR WILL PROVIDE AND INSTALL WATER HAMMER ARRESTERS AND OR AIR CHAMBERS AT ALL RESTROOM AND KITCHEN FAUCETS, ALL OTHER QUICK CLOSING FAUCETS, HOSE BIBBS AND FLUSH VALVE LOCATIONS THROUGHOUT THE BUILDING. FAILURE TO INSTALL ITEMS ABOVE WILL RESULT IN CONTRACTOR PROVIDING AND REINSTALLING SAID ITEMS AT HIS OWN EXPENSE. CONTRACTOR SHALL INSTALL PER MANUFACTURER'S RECOMMENDATIONS.

8. MECHANICAL CONTRACTOR SHALL PROVIDE ACCESS DOORS TO ALL EQUIPMENT/PARTS REQUIRING MAINTENANCE.

9. REFER TO SPECIFICATION SECTION 114000 - (FOODSERVICE EQUIPMENT) FOR KITCHEN EQUIPMENT REMOVAL.

10. ALL WORK DONE IN CRAWL SPACE AND TUNNELS SHALL BE DONE BY A CERTIFIED CLASS III ASBESTOS WORKER, PROPERLY DRESSED AND WEARING A RESPIRATOR.

REVISIONS

| No. | Int. | Date | Description |
|---|---|---|---|
| 1 | RLH | 3/4/16 | REVISED WASTE PIPING FOR GARBAGE DISPOSAL |

WOMER & ASSOCIATES
ARCHITECTURE • ENGINEERING • PLANNING
Suite 600 - 221 N. Wall St., Spokane, Washington 99201
TEL: (509) 534-4884 FAX: (509) 534-4943 www.wwomer.com

MICHAEL G. HUBBARD
STATE OF WASHINGTON
39485
REGISTERED PROFESSIONAL ENGINEER
03/11/2016

MADISON ELEMENTARY SCHOOL KITCHEN REMODEL
319 W. NEBRASKA AVE.
SPOKANE, WA 99207

PLUMBING PLAN

Job No. 286-012
Date 03/12/2016

Designed RLH
Drawn RLH
Checked MGH

P1.00

P1.00 PLUMBING PLAN.DWG